DORGEAN
Beijing Dorgean Electronic Technology Co.,Ltd
Instrument Expert
Original factory packaging
www.dorgean.com

MODEL 010C
WIND SPEED SENSOR

OPERATION MANUAL

Met One Instruments, Inc
Corporate Sales & Service: 1600 NW Washington Blvd. Grants Pass, OR 97526
Tel (541) 471-7111 Fax (541) 471-7116
www.metone.com service@metone.com

1.0 GENERAL INFORMATION

1.1 The 010C Wind Speed Sensor uses a durable, three-cup anemometer assembly and solid-optical link with a 40-slot chopper disk to produce a pulsed output whose frequency is proportional to wind speed. An internal heater reduces moisture for extended bearing life. This sensor is usually used in conjunction with the 191 Cross arm Assembly. The sensor may be used with a translator module, or used directly with a variety of data loggers.

1.2 The Sensor Cable has a quick-connect connector with vinyl jacketed, shielded cable. Cable length is given in -XX feet on each cable part number. A 1953-XX cable is used with translators having terminal strip connections.

Table 1-1
Model 010C Wind Speed Sensor Specifications

Performance Characteristics

Maximum Operating Range	0-60 meters/sec or 0-125 mph
Starting Speed	0.27 meters/sec or 0.6 mph
Calibrated Range	0-50 meters/sec or 0-100 mph
Accuracy	±1% or 0.15 mph
Temperature Range	-50°C to +85°C
Response	Distance constant less than 5 ft of flow*

*The distance traveled by the air after a sharp-edged gust has occurred for the anemometer rate to reach 63% of the new speed. Distant constant less than 15ft of flow with optional 010C-1 aluminum cupset.

Electrical Characteristics

Power Requirements	12 VDC at 10 mA
Output Signal	11-volt pulse
Output Impedance	100 ohms maximum
Heater Power Requirement	12 VDC at 350 mA
Standard Cable Length	300’ maximum (consult factory if longer cable is to be used for special requirements)

Physical Characteristics

Weight	1.1 pounds
Finish	Anodized aluminum
Mounting	Use with 191 Crossarm
Cabling	1953-XX Cable (XX is cable length in feet)

Optional Accessories

A. External heater and power supply for extreme low temperature operation.
B. Ice Skirt for extreme icing environments.
C. Aluminum cup assembly.

2.0 INSTALLATION

2.1 The 010C Wind Speed Installation

A. Mount the cup assembly and secure with the Allen head set screw, check to see that the cup assembly rotates freely.

B. Install the sensor in the end of the Model 191 Crossarm Assembly (the end without the bushing).

C. Tighten the locking set screw. Do not over-tighten. Apply a small amount of silicone grease to set screws to prevent freezing in adverse environments.

D. Connect the cable assembly to the keyed sensor receptacle and tape it to the mounting arm.

2.2 Wiring

A. The cable assembly contains five wires. Typical wiring hookup is shown in Figure 2-1.

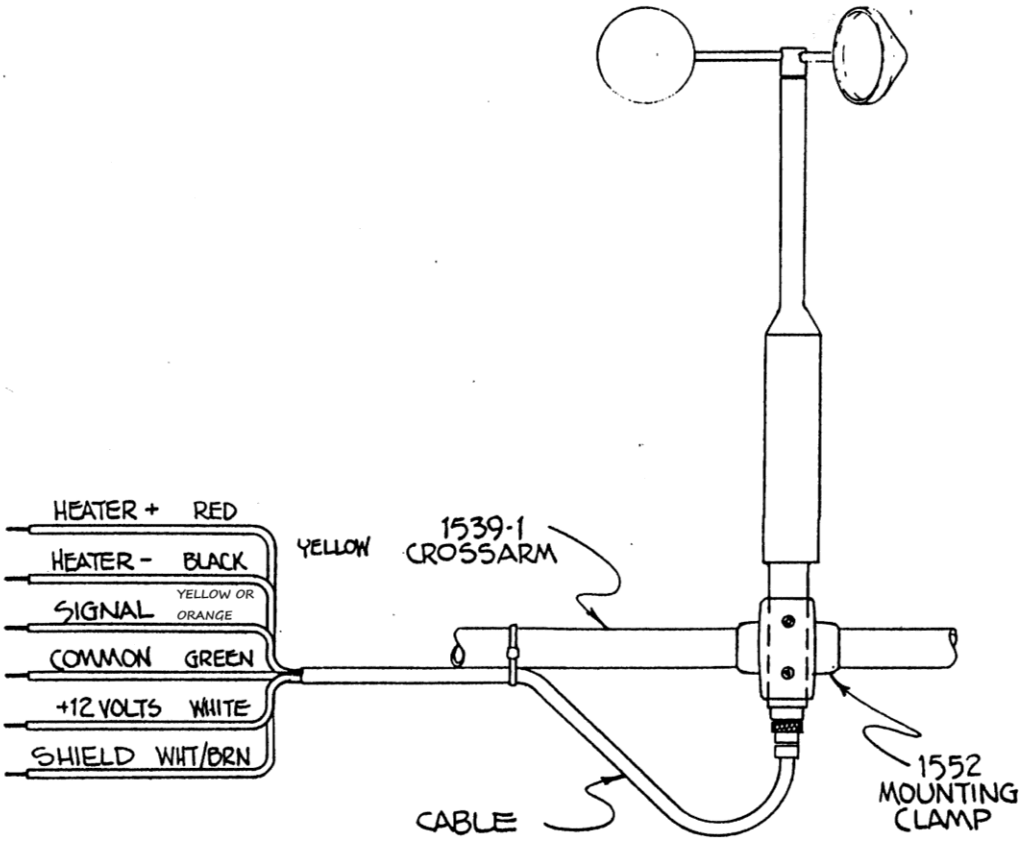

FIG. 2-1
TYPICAL 010C INSTALLATION

Sensor Connection	Wire Color	Description
Pin A	White	+12 VDC
Pin B	Green	Common
Pin C	Yellow or Orange	Signal
Pin D	Black	Heater -
Pin E	Red	Heater +
Pin F	No Connection	No Connection
No Connection	White/Brown	Shield

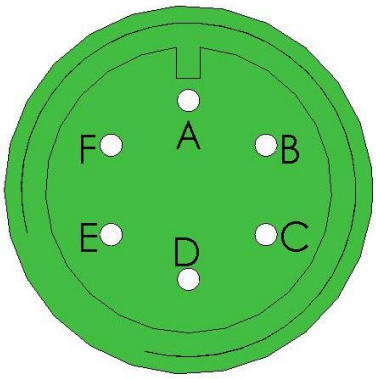

Electrical Connector

View looking at connector pins. (Pins are also identified on connector).

2.3 Lightning Protection

A. Weather sensors are sensitive to direct or nearby lightning strikes. A well-grounded metal rod or frame should be placed above the sensor installation. In addition, the shield on the signal cable leading to the translator must be connected to a good earth ground at the translator end and the cable route should not be vulnerable to lightning.

3.0 OPERATIONAL CHECK-OUT AND CALIBRATION

3.1 010C Wind Speed Sensor Check-Out

A. Spinning the anemometer cup assembly will produce a series of pulses (40 pulses per revolution). To verify sensor output, monitor this signal with either the translator module, data logger, or an oscilloscope. (Refer to Frequency vs. Wind Speed Table 3-1). Spinning the hub of the wind speed transmitter without the cup assembly mounted and allowing it to coast to a stop will give a good indication of threshold performance; a jerky or sudden stop indicates damage to bearings, bent drive shaft, or obstruction in the light chopper.

B. Inspect the cup assembly for loose cup arms or other damage. The cup assembly cannot change calibration unless a mechanical part has come loose or has been broken. If a cup arm is loose or broken the calibration of the sensor may be affected.

C. If the sensor heater is used, check internal heater operation by sliding sensor cover down and touching the housing behind the printed circuit board. The housing should feel warmer than the adjoining metal parts. The sensor has a built-in heater that is designed to provide a raise in the internal temperature, providing a small amount of positive pressure. This heater requires as external 12 V (@500ma) power supply.

FREQUENCY vs WIND SPEED FOR 010 SENSOR
TABLE 3-1

Transfer Functions

Miles per hour:

$rpm = 16.767 * (V_{mph} - 0.6)$

$V_{mph} = (rpm / 16.767) + 0.6$

$f_{Hz} = (V_{mph} - 0.6) / .08946$

$V_{mph} = V_{m/s} * 0.44704$

$f_{Hz} = rpm * 0.66667$

Meters per second:

$rpm = 37.522 * (V_{m/s} - 0.27)$

$V_{m/s} = (rpm / 37.522) + 0.27$

$f_{Hz} = (V_{m/s} - 0.27) / 0.039976$

$V_{m/s} = V_{mph} / 0.44704$

Conversion Tables

V_{mph}	$V_{m/s}$	f_{Hz}	rpm
10.0	4.47	105.1	157.6
20.0	8.94	216.9	325.3
30.0	13.41	328.6	492.9
40.0	17.88	440.4	660.6
50.0	22.35	552.2	828.3
60.0	26.82	664.0	996.0
70.0	31.29	775.8	1163.6
80.0	35.76	887.5	1331.3
90.0	40.23	999.3	1499.0
100.0	44.70	1111.1	1666.6
110.0	49.17	1222.9	1834.3
120.0	53.64	1334.7	2002.0
130.0	58.12	1446.5	2169.6

rpm	$V_{m/s}$	V_{mph}	f_{Hz}
100	2.94	6.56	66.67
200	5.60	12.53	133.3
300	8.27	18.49	200.0
400	10.93	24.46	266.7
500	13.60	30.42	333.3
600	16.26	36.38	400.0
700	18.93	42.35	466.7
800	21.59	48.31	533.3
900	24.26	54.28	600.0
1000	26.92	60.24	666.7
1100	29.59	66.21	733.3
1200	32.25	72.17	800.0
1300	34.92	78.13	866.7
1400	37.58	84.10	933.3
1500	40.25	90.06	1000.0
1600	42.91	96.03	1066.7
1700	45.58	101.99	1133.3
1800	48.24	107.95	1200.0

$V_{m/s}$	V_{mph}	f_{Hz}	rpm
2.5	5.59	55.8	83.7
5.0	11.18	118.3	177.5
7.5	16.78	180.9	271.3
10.0	22.37	243.4	365.1
12.5	27.96	305.9	458.9
15.0	33.55	368.5	552.7
17.5	39.15	431.0	646.5
20.0	44.74	493.5	740.3
22.5	50.33	556.1	834.1
25.0	55.92	618.6	927.9
27.5	61.52	681.2	1021.7
30.0	67.11	743.7	1115.5
32.5	72.70	806.2	1209.3
35.0	78.29	868.8	1303.1
37.5	83.89	931.3	1396.9
40.0	89.48	993.8	1490.7
42.5	95.07	1056.4	1584.6
45.0	100.66	1118.9	1678.4
47.5	106.25	1181.5	1772.2
50.0	111.85	1244.0	1866.0
52.5	117.44	1306.5	1959.8
55.0	123.03	1369.1	2053.6
57.5	128.62	1431.6	2147.4
60.0	134.22	1494.1	2241.2

Abbreviations:

$V_{m/s}$ = Wind speed (meters per second)

V_{mph} = Wind speed (miles per hour)

f_{Hz} = Sensor output frequency (Hz)

rpm = Shaft speed (revolutions per minute)

Table 3-1

4.0 MAINTENANCE AND TROUBLESHOOTING

4.1 General Maintenance Schedule*

6 – 12 Month Intervals:

A. Inspect sensor for proper operation per Section 4.2.
B. Replace wind speed sensor bearings in extremely adverse environments per Section 4.5.

12 – 24 Month Intervals:

A. Recommended complete factory overhaul of sensor.

*Schedule is based on average to adverse environments.

Table 4-1
010C Wind Speed Sensor Troubleshooting

Symptom	Probable Cause	Solution	Refer to
No wind speed output	Loss of supply voltage	Check translator +12 supply & connecting cables	Figure 2-1
	Faulty integrated amplifier	Replace circuit board	Section 4.5
	Faulty diodes, D1, D2	Replace circuit board	Section 4.5
	Faulty detector	Replace detector	Section 4.6
No wind speed output below 2-5 mph	Bad bearing(s)	Replace bearing(s)	Section 4.4
	Faulty detector	Replace detector	Section 4.6
Wind speed signal drops as speed increases	Faulty detector	Replace detector	Section 4.6

4.2 010C Wind Speed Sensor: 6 – 12 Month Periodic Service

A. At the crossarm assembly, disconnect the quick disconnect plug from the sensor (leave the cable secured to the crossarm) and remove the sensor from the crossarm assembly.

B. Loosen the set screw holding the cup assembly. Support the rotating hub of the sensor with one hand and pull the anemometer cup assembly free.

C. Visually inspect the anemometer cups for cracks and breaks. Also, make sure that each arm is securely attached to the cup assembly hub.

D. Slide the sensor cover down to expose the light-chopper disc assembly, light source, detector, and circuit board.

E. Inspect the interior of the sensor for any signs of corrosion and/or dust buildup.

F. Inspect the light-chopper for cracks, and make sure that all slots are free of corrosion.

G. Inspect the signal-conditioning module for cracks and corrosion around soldered connections.

H. Rotate the sensor hub assembly to ensure that it turns freely and that the sensor bearings are not damaged. Make sure the light-chopper assembly is not contacting the light source and detector.

I. Apply a small amount of silicone lubricant. (Dow-Corning DC-33 or equivalent) to the sensor O-ring seals; slide the cover up over the sensor and wipe off any excess lubricant.

J. A moisture vent is located on the base of the sensor; make sure that this vent is clear.

K. Re-install sensor according to installation procedure (Section 2.0); verify proper operation using procedures in Section 3.0.

4.3 010C Wind Speed Sensor Maintenance (Refer to 010C Sensor Assembly Drawing)

The following procedures require a relatively clean, dry work area, a source of 12 VDC power at approximately 20 mA, and an oscilloscope (DC to 10 KHz minimum range required.

4.4 Sensor Bearing Replacement. (Refer to 010C Sensor Assembly Drawing)

A. Remove sensor from tower and remove cup assembly (1). Refer to Section 4.2.

B. Disassemble sensor and remove old bearings (6).

1. Slide the sensor cover (16) down to expose the light-chopper disc assembly (10), detector assembly (12) and circuit board (18).

2. Loosen both special set screws on the shaft of the light chopper assembly (11).

3. Support the light-chopper assembly (10) with one hand and slowly pull the rotating hub/shaft assembly (2) out of the column (8).

4. Remove the shield (4) and slinger (5) from the column (8).

5. Remove the light-chopper assembly (10) from the sensor housing, being careful not to damage the slots located between the light-chopper holder and the lower bearing.

6. Insert the lower end of the rotating hub/shaft assembly into the upper bearing, cock it slightly to one side and push out the lower bearing.

7. Insert a right-angle type of tool, such as an Allen wrench, into the upper bearing; cock it slightly to one side and remove the bearing.

8. Clean dirt from bearing bores, using a cotton swab and alcohol.

C. Install the new bearings and assemble the sensor.

1. Install new upper and lower bearings in the column (8). Bearings should slide easily into bearing bores.

2. Install a slinger and shield (4, 5) on the column assembly. Use new parts if old ones are damaged or corroded.

3. Insert the rotating hub shaft (2) into the column assembly (8), through the shield (4), slinger, and upper bearing, until it starts to protrude through the lower bearing.

4. Support the light-chopper assembly (10) with one hand and slowly push the rotating hub shaft into it until the shaft almost touches the bottom.

5. Tighten both special set screws on the light-chopper assembly; do not over tighten as the set screw tips will damage the shaft.

6. Rotate the sensor hub assembly (2) to ensure that it turns freely and that an endplay of about .005” exists.

7. Hold sensor vertically and make sure that the light-chopper assembly (10) is not contacting the detector assembly (12).

8. Apply small amount of silicone lubricant (Dow-Corning DC-33 or equivalent) to the sensor O-rings (9); slide the cover (16) up over the sensor and wipe off any excess lubricant.

D. Replace cup assembly and re-install (refer to Section 2.0)

4.5 <u>1200-1 Circuit Board Assembly Replacement</u> (Refer to 010C Assembly Schematic)

A. Remove sensor from tower and remove cup assembly (refer to Section 4.2).

B. Slide the sensor cover (16) down to expose the light-chopper disc assembly (10), detector assembly (12), and circuit board (18).

C. Remove two screws (17) holding circuit board assembly (18) and lift circuit board away from sensor housing.

D. Note color of wires and then unsolder wires to detector assembly from circuit board and three wires from connector (19).

E. Install new circuit board assembly by reversing above procedure.

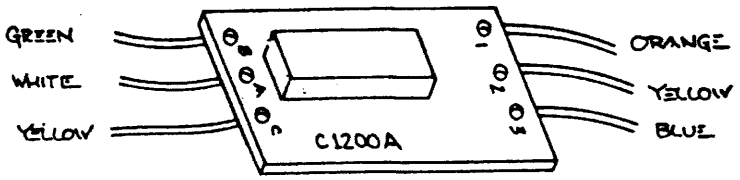

— 010 WIND SPEED SENSOR —

4.6 <u>Detector Assembly Replacement</u> Refer to 010C Assembly Schematic)

<u>NOTE: 010C sensors SN M10560 and later use 520253 photodetector. Older sensors use 1074 photodetector assemblies.</u>

A. Remove sensor from tower and remove cup assembly. Refer to Section 4.2.

B. Slide the sensor cover (16) down to expose the light-chopper disc assembly (10), detector assembly (12) and circuit board (18).

C. Remove two screws (17) holding circuit board assembly (18) and lift circuit board away from sensor housing.

D. Note color of wires and then unsolder wires to detector assembly from circuit board (18).

E. Remove two screws (20) holding detector assembly (12) and remove assembly.

F. Install new detector assembly by reversing above procedures.

4.7 010C Wind Speed Sensor Repair and Recalibration Service

The factory provides fast, economical service for the user. This repair and calibration service includes disassembly and detailed inspection of all moving mechanical parts and electronic components.

Service includes replacement of bearings, regardless of apparent condition, and functional test of sensor. Replacement of the following items is also included: O-rings, shield and slinger, shaft, set screws. Other components will be replaced as required. Only charges for additional materials will be added to the basic service charge.

Table 4-2
Replacement 010C Parts List

Ref No.U	Description	Part No.
1	Cup Assembly	Lexan - 2672 Aluminum – 2672-1
2	Hub/Shaft Assy.	2658
4	Shield	1009
5	Slinger	1010
6	Bearing	1055
9	O-ring	720120
10	Chopper Wheel Assembly	2202
11	Set Screw	601250
12	Photo Detector	520253*
13	Heater Clamp	480100
14	Heater	805080
16	Sensor Cover	2675
17	PCBA Mounting Screws	601240
18	PCBA	1200-1
20	Detector Assembly Mounting Screws	601270
22	Standoff	860050
23	Integrated Amplifier	620300
24	Nut, Hex, Kep 4-40	600400
25	Screw FH 82° 4-40 x 3/8	601330
26	Screw FH 82° 4-40 x ¼	601240

NOTE: 010C sensors SN M10560 and later use the black 520253 photodetector. Earlier sensors use the white 1074 photodetector assemblies.

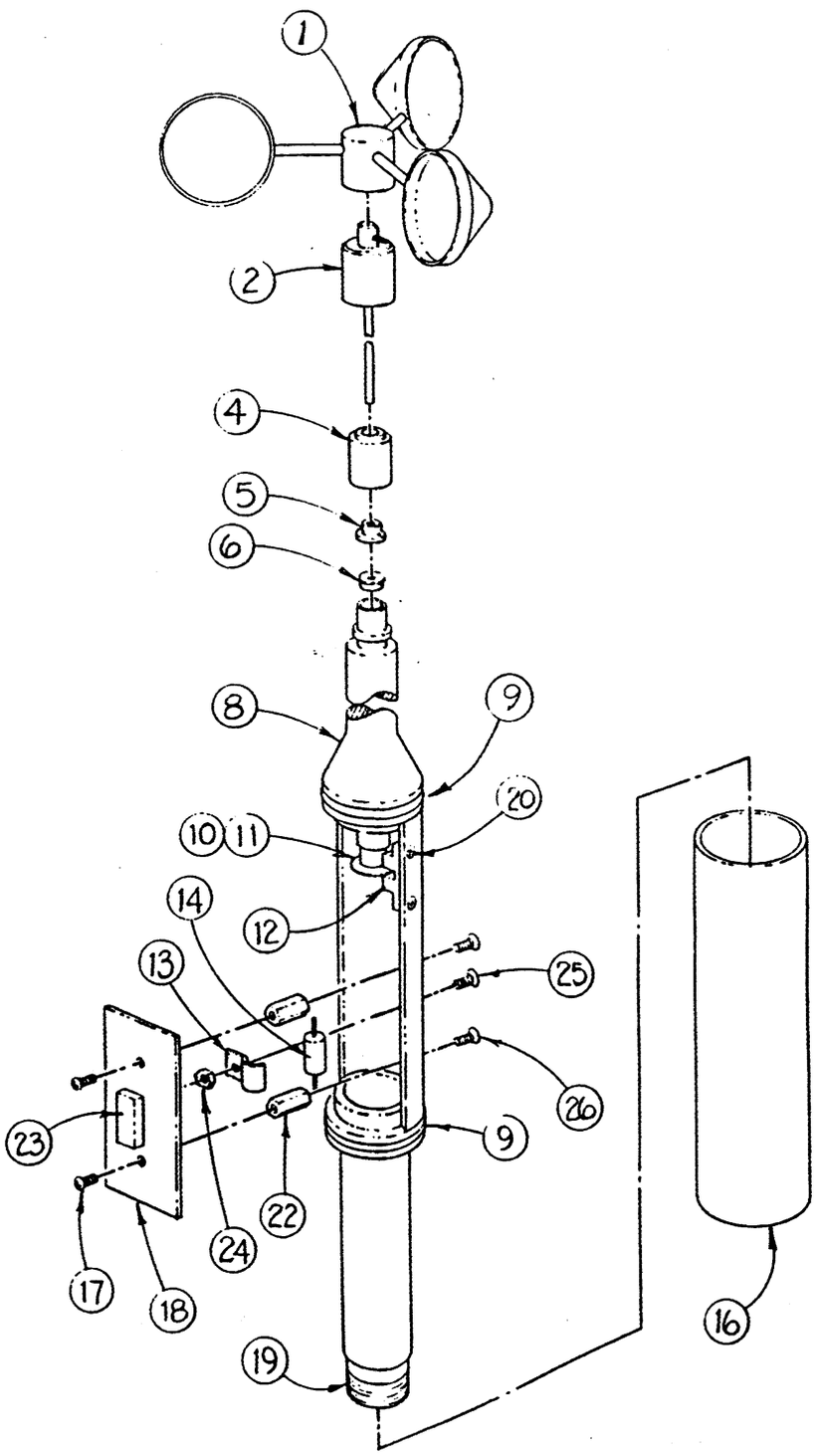

MODEL 010C WIND SPEED SENSOR